FORD **TRUCKS** 4142P EURO6

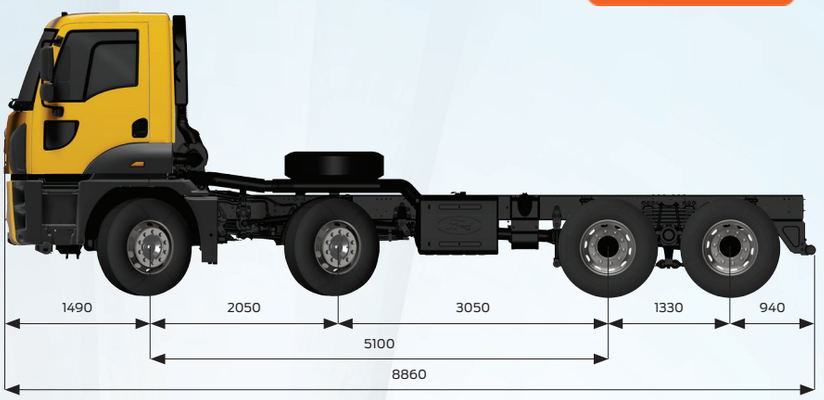

Basic Features	
Vehicle Type	Concrete Pump
Axle	8x4
Emission	Euro 6
Cabin Type	Day Cab
Wheelbase (mm)	5100
Engine	
Type	Ecotorq 12,7 liters
Displacement (cc)	12740
Bore x Stroke	130 mm x 160 mm
Power	420 PS (308,9 kW) / 1800 rpm
Torque	2150 Nm / 1000-1300 rpm
Compression Ratio	17 +/- 0,5 : 1
Oil Filling Volume	50 L
Coolant Volume	37 L (57 L with Intarder)
Transmission	
Clutch	430 mm Single Disc
Manuel Transmission / Ratios (1. gear - 16. gear)	ZF 16S 2230 (13,805-0,836)
Steering	
	Hema ZF 8098 Servocom
Chassis	
Chassis Thickness	10 mm
Chassis Strength	500 MPa
Suspension (Rear / Front)	90 mm Parabolic Leaf Springs / 100 mm Parabolic Tandem Suspension
Axle	Hub Reduction
Axle Ratio	4,08
Tyres	315/80 R 22,5
Wheel Rim	22,5 x 9 Steel
Braking System	
Brakes (Ø mm x mm Length)	410 X 200, Z-Cam Brake System
Braking System	Dual Brake Circuit – Air Processing Unit with Integrated Oil Seperator and Heater
Engine Brake Power	max. 340 kW (Engine Level)
Intarder Power	max. 600 kW / continuous 160 kW
Electrical System	
Battery	24V, 2 x 12V 150 Ah
Alternator / Starter Motor	130 A / 6,5 kW
Tanks	
Fuel Tank	315 L Steel
SCR Tank	55 L

TRUCKCENTRUM east, s.r.o.

www.truckcentrum.sk

Na záhumní 613, 040 15 Košice - Šaca, Slovensko
Okresný súd Košice I, oddiel Sro, vložka 25837/V

IČO: 45 599 165, IČ DPH: SK2023052273

Dimensions (mm)					
Front Overhang			1490		
Wheelbase			5100		
Overall Length			8860		
Distance Between 1st and 2nd Wheel Centers			2050		
Distance Between 2nd and 3th Wheel Centers			3050		
Distance Between 3th and 4th Wheel Centers			1330		
Overall Cab Length			1820		
Total Vehicle Height			3166		
Overall Vehicle Width (Excluding Mirrors)			2540		
Chassis Width			770		
Rear Overhang			940		
Useful Chassis Length			6490		
Chassis Height - Front			225		
Chassis Height - Rear			285		
Ground Clearance - Front			423		
Ground Clearance - Rear			300		
Turning Radius			11930		
Weights (kg)	1. Axle	2. Axle	3. Axle	4. Axle	Total
Technically Permissible Weights	7500	7500	13400	13400	39000
Kerb Weight	3616	3487	2177	2157	11437
Payload	3884	4013	11223	11243	27563
GVM (Legal)	7500	7500	9500	9500	32000

STANDARD EQUIPMENT

- Air conditioner
- Radio/CD Player
- 4 Point Independent Cab Suspension
- Cruise Control
- Electrically Operated Windows
- Electrically Operated and Heated Side Mirrors
- Electrically Operated Headlamp Leveling
- Rake and Reach Adjustable Steering Column
- Heated and Air Suspended Driver Seat
- Lumbar Support
- Manual Operated Sunroof
- Front and Rear Vehicle Antiroll Bars
- Anti-Lock Brake System (ABS)
- Brake Lining Wear Indicator
- Immobilizer
- Single Key with Remote Control and Central Locking
- Home Safe Light
- Approach Light
- Differential Lock
- Digital Tachograph
- Switchable Air Compressor for Improved Fuel Economy
- Rear Window
- Short Bumper

OPTIONAL EQUIPMENT

- 6000 mm Wheelbase Option
- Aluminium Alloy Wheel Rims
- Intarder
- ADR Pack
- Wet Type Cab Heater *
- Cold Pack with Wet Type Cab Heater
- Power Cab Tilting
- TTransmission Driven PTO Options & Interior Control Unit
- Engine Driven PTO & Interior Control Unit
- Automatic Traction Control (ATC)

* Available with 6000mm Wheelbase Option

This leaflet includes products designed for Ford vehicles. It provides information about the current technical specifications and the standard or optional accessories available as of the date it was issued. Features of standard and optional accessories of the vehicles may be changed from time to time. For this reason, please consult our Authorized Dealers to obtain updated and accurate information on the features of the vehicle you wish to buy. For the aforementioned reason, this leaflet does not constitute an assurance as to the specifications listed herein. The images used in this leaflet may be different from the vehicles on sale. The technical specifications provided herein are for standard vehicles. Selection of any optional accessories might cause differences from these specifications.